Name _____ Date_____

Visualization Chapter 9

Prototypes

Prototype Design

Mechanical engineers work in many different fields that require the design of items that work together in complex systems. Before the manufacturing of the individual parts of these complete systems, there must be a design process. And as we discussed earlier, the design process requires visualization, often in the form of sketching, then the creation of more complex computer generated 2D drawings and 3D models. Virtual prototypes can also be made and tested in simulated conditions using computer tools before going to the expense of creating physical prototypes.

Designing Parts

The design of parts is an ongoing process and parts need to be easy to edit. Each individual feature on a part, from the length, width, and height, to details such as fillets and rounds, chamfers, holes, and threads, needs to be editable. Part of the design process may include turning certain features off or on, or moving them to different locations. If you do not plan your modeling carefully, future editing may be difficult.

Exercises

3D Model

When you build a 3D model, you use parameters, or dimensions, to define the actual geometry that is created. As shown in the figure, sometimes the size and/or location of a feature can be defined by its relationship to another feature.

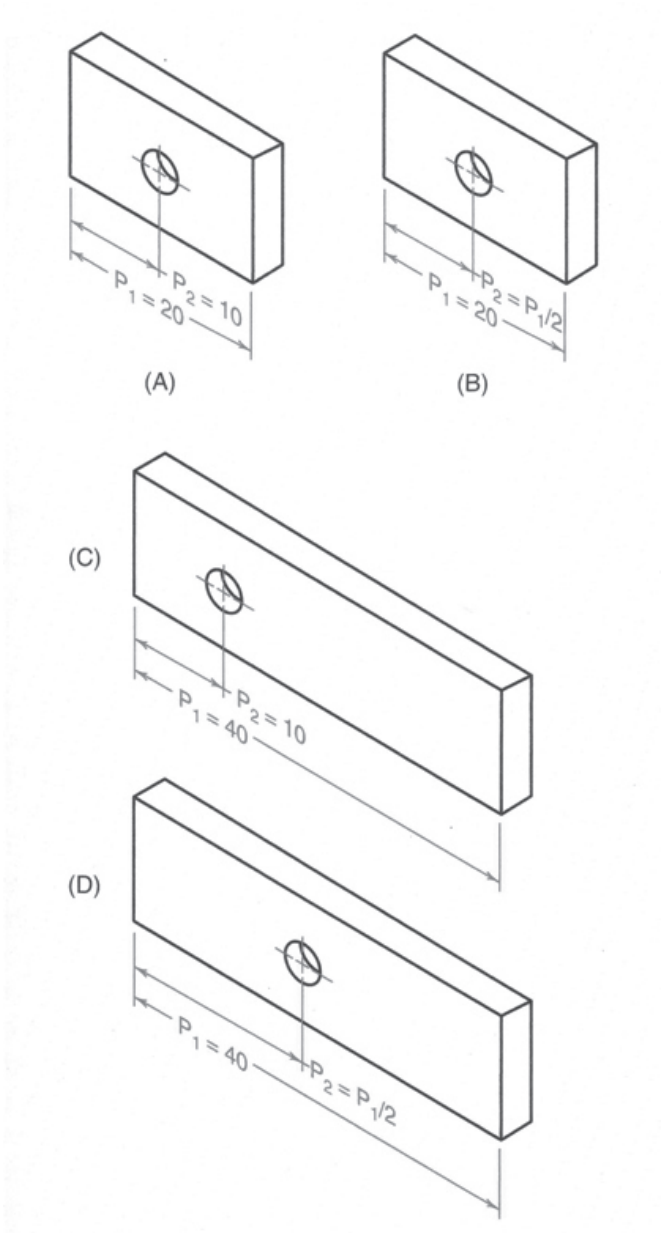

Copyright © McGraw-Hill Education.

Name _____ Date_____

Visualization Chapter 9

Prototypes

Variations

If there are multiple variations of a basic part, one base model can be created and all design variations are made relative to the original model by adding or subtracting features and editing dimensions. Adding constraints to features of equal size can add to the efficiency of the editing process. For example, if there are multiple holes in a part, and they are all the same size, then it could be more efficient to create one hole, pattern or array it, and make sure it has the appropriate constraints. If you need to change the diameter or thread specification of the holes, you can change one and they will all change. The same can be said for fillets, rounds, chamfers, and other features that often occur in multiple instances and may have to be turned off or on, or changed to another size.

Constraints

Geometric constraints such as parallel, perpendicular, tangent, concentric, collinear, equal length, and others can be applied to both geometry and features in many CAD programs. The use of symmetry is also an important part of capturing the design intent of a feature because an axis or datum plane can be used for mirroring features or revolving geometry.

Modeling Process

Learning how to look at a part and break it down into its individual features will help you create more efficient CAD models. The following exercises are intended to help you practice breaking down the geometry of a finished part into the profiles and features you will create during the modeling process.

Some of the following items may play a part in your modeling process:

- Does the part have natural symmetry you can use to mirror features or create a revolved profile?
- Are there multiple instances of a single feature on a part that you can duplicate or array?
- Should you create the fillets and rounds as part of the sketch or profile of the basic shape or as separate features?
- Is the placement of any one feature dependent on the placement of another?
- Does the manufacturing process have any effect on the design?

Example

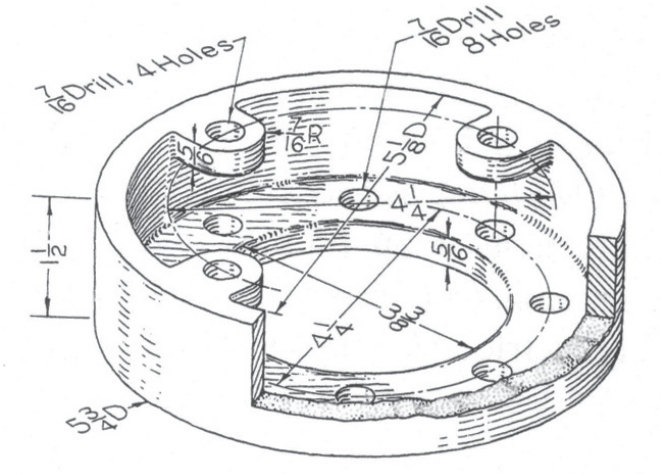

Take a look at the piston cap shown. How would you model it? Write down the steps you would take, in general, to create the whole model. You do not need to use the exact commands specific to the CAD software you are used to, just general commands. You may use sketches if it helps with your explanation.

Copyright © McGraw-Hill Education.

Name _____ Date_____

Visualization Chapter 9

Prototypes

Copyright © McGraw-Hill Education.

Name _____ Date_____

Visualization Chapter 9

Prototypes

Exercise 1

Given the axle center shown, how would you model it? Write down the steps you would take, in general, to create the whole model. You do not need to use the exact commands specific to the CAD software you are used to, just general commands. You may use sketches if it helps with your explanation.

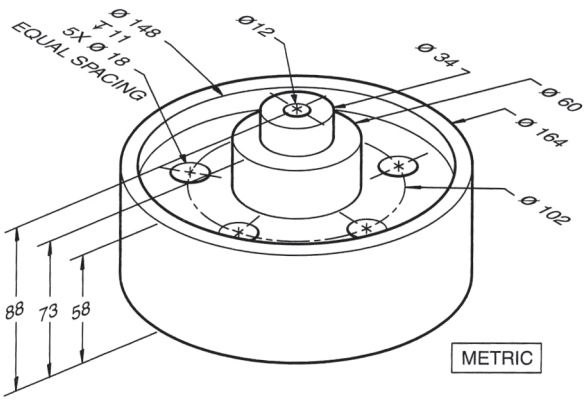

When you are done, if you have the opportunity, compare your results with your classmates. Did you choose the same way? If there are differences, is one way more efficient than another? Is one way easier to edit than another?

_____

_____

_____

Copyright © McGraw-Hill Education.

Name _____ Date_____

Visualization Chapter 9

Prototypes

Exercise 2

Given the counter block shown, how would you model it? Write down the steps you would take, in general, to create the whole model. You do not need to use the exact commands specific to the CAD software you are used to, just general commands. You may use sketches if it helps with your explanation.

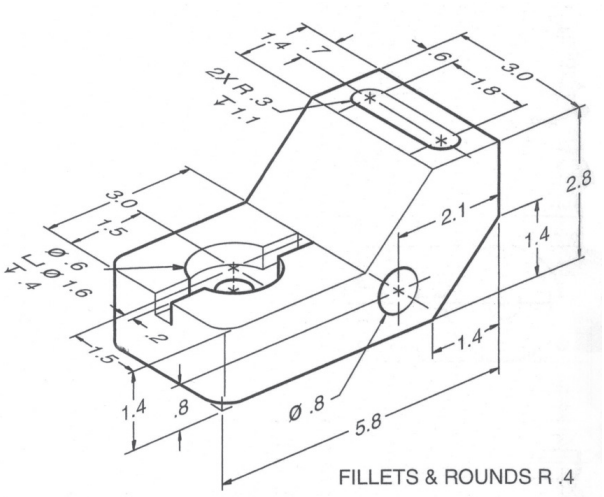

When you are done, if you have the opportunity, compare your results with your classmates. Did you choose the same way? If there are differences, is one way more efficient than another? Is one way easier to edit than another?

_____

_____

_____

Copyright © McGraw-Hill Education.

Name _____ Date_____

Visualization Chapter 9

Prototypes

Exercise 3

Given the dryer clip shown, how would you model it? Write down the steps you would take, in general, to create the whole model. You do not need to use the exact commands specific to the CAD software you are used to, just general commands. You may use sketches if it helps with your explanation.

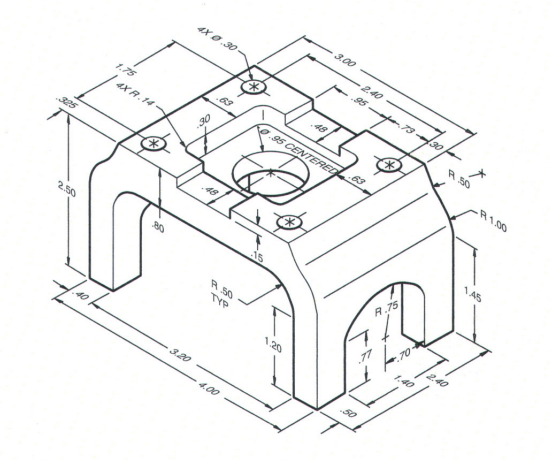

When you are done, if you have the opportunity, compare your results with your classmates. Did you choose the same way? If there are differences, is one way more efficient than another? Is one way easier to edit than another?

_____

_____

_____

Copyright © McGraw-Hill Education.